Assembly Instruction

Fraser Magazine Rack W 1 Door

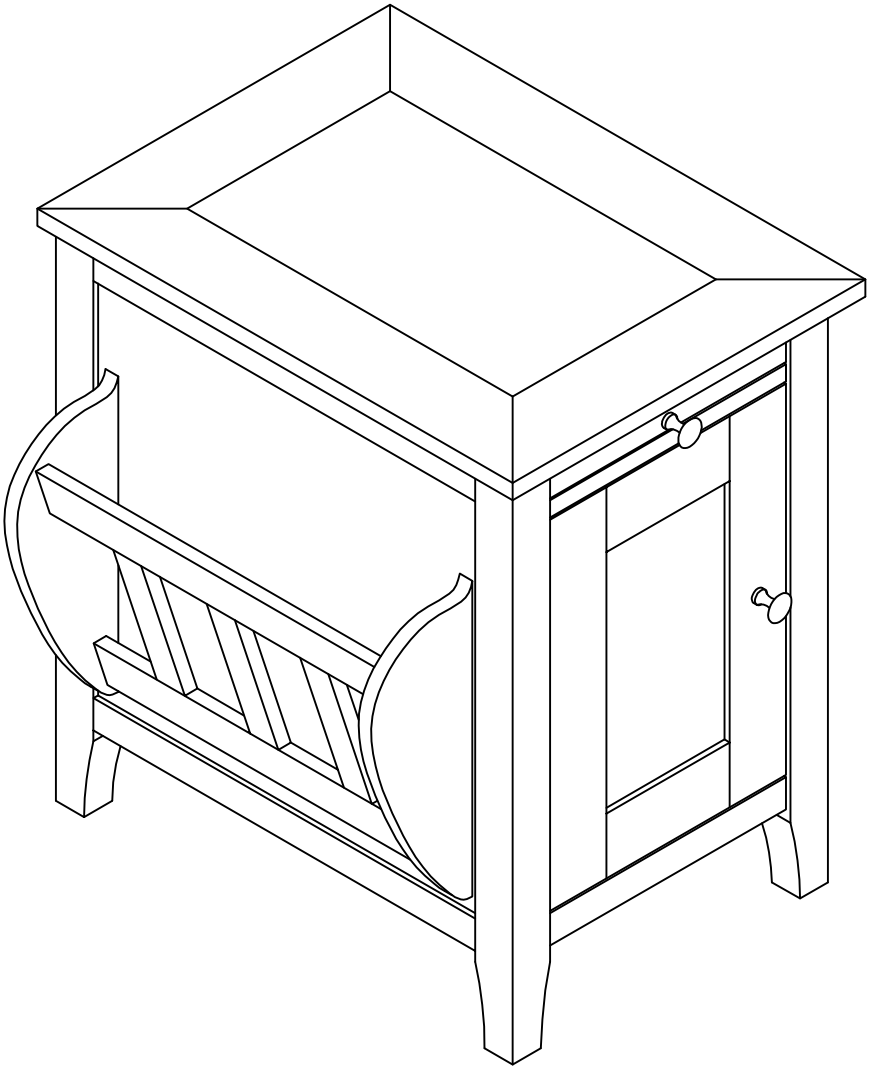

Require

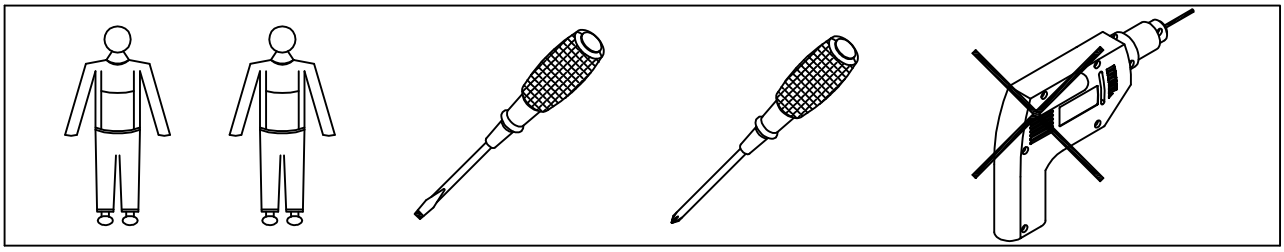

Fraser Magazine Rack W 1 Door
parts list

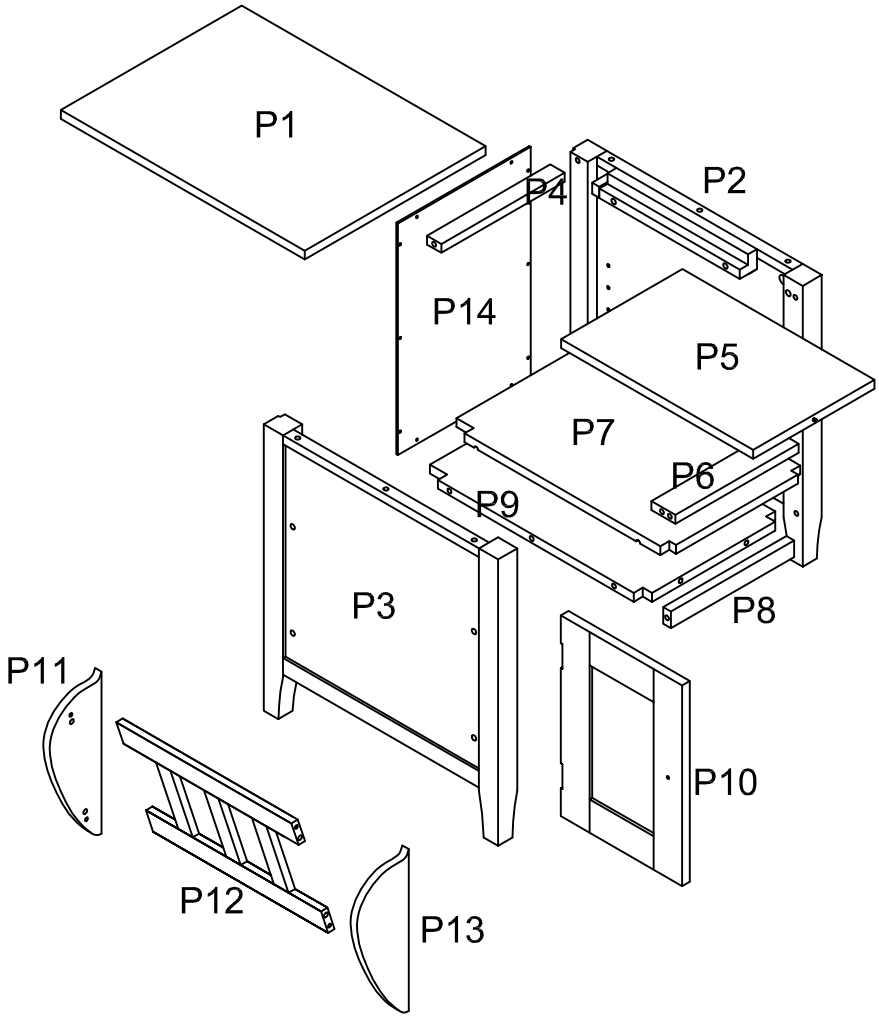

contents of the bag

1		ø6 x 12mm	10PCS
2		ø8 x 30mm	11PCS
3		ø6 x 25mm	4PCS
4		ø15 x 12mm	12PCS
5		ø6.5 x 35mm	12PCS
6		83 x 22mm	1PC
7		ø5 x 16mm	4PCS
8		ø25 x 25mm	2PCS

9		ø9 x 22mm	1PC
10		44 x 15mm	2PCS
11		ø5 x 12mm	13PCS
12		35 x 12.5mm	1PC
13		47 x 15mm	1PC
14		ø10 x 10mm	4PCS
15		ø5 x 25mm	4PCS
16		ø5 x 25mm	4PCS

step 1

4		2PCS
5		2PCS

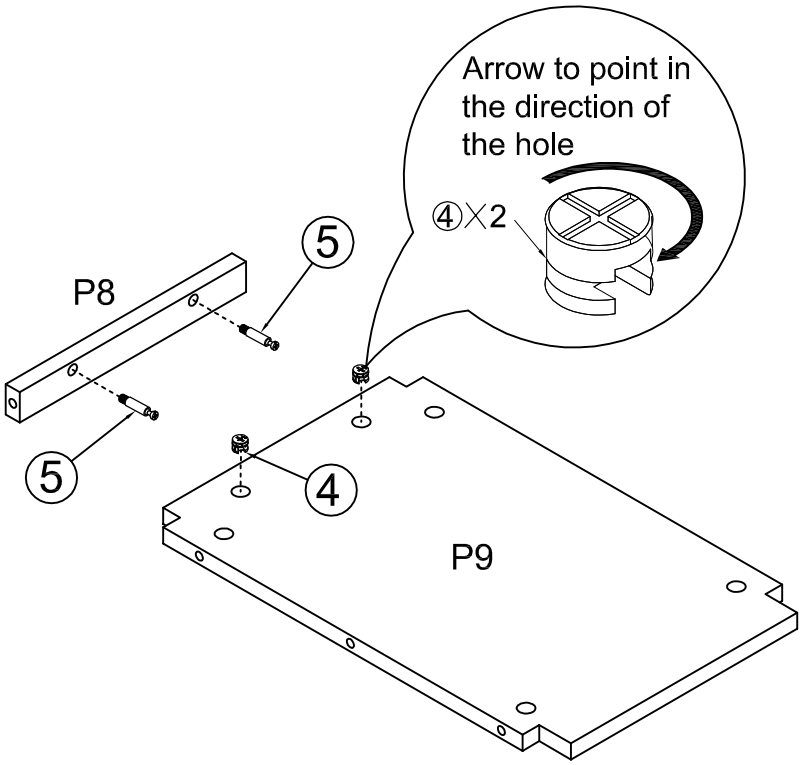

step 2

3		4PCS
14		4PCS
15		4PCS
6		1PC

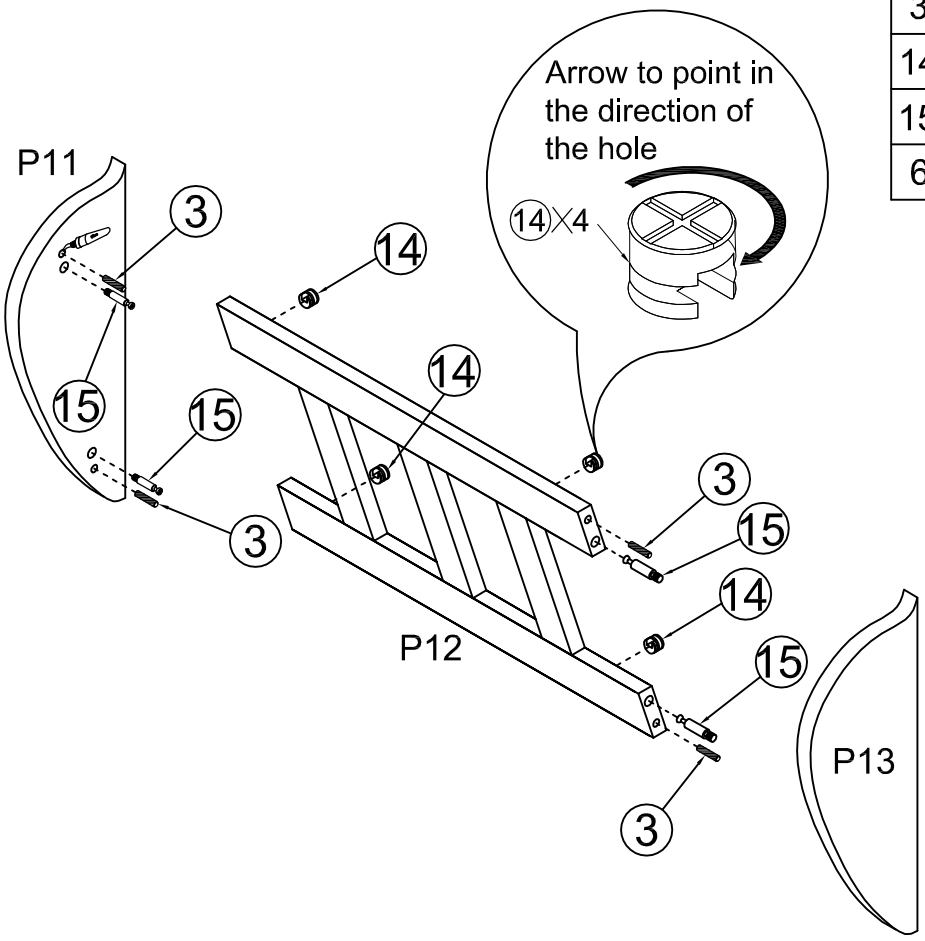

step 3

16		4PCS
17		4PCS

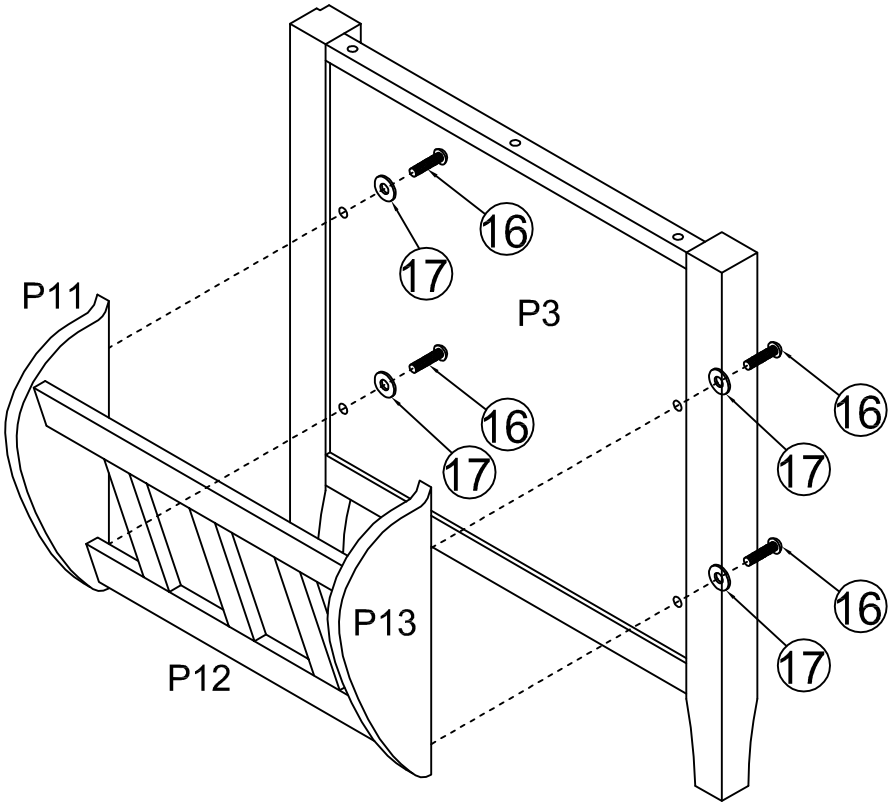

step 4

3		8PCS
4		6PCS
5		6PCS
6		1PC

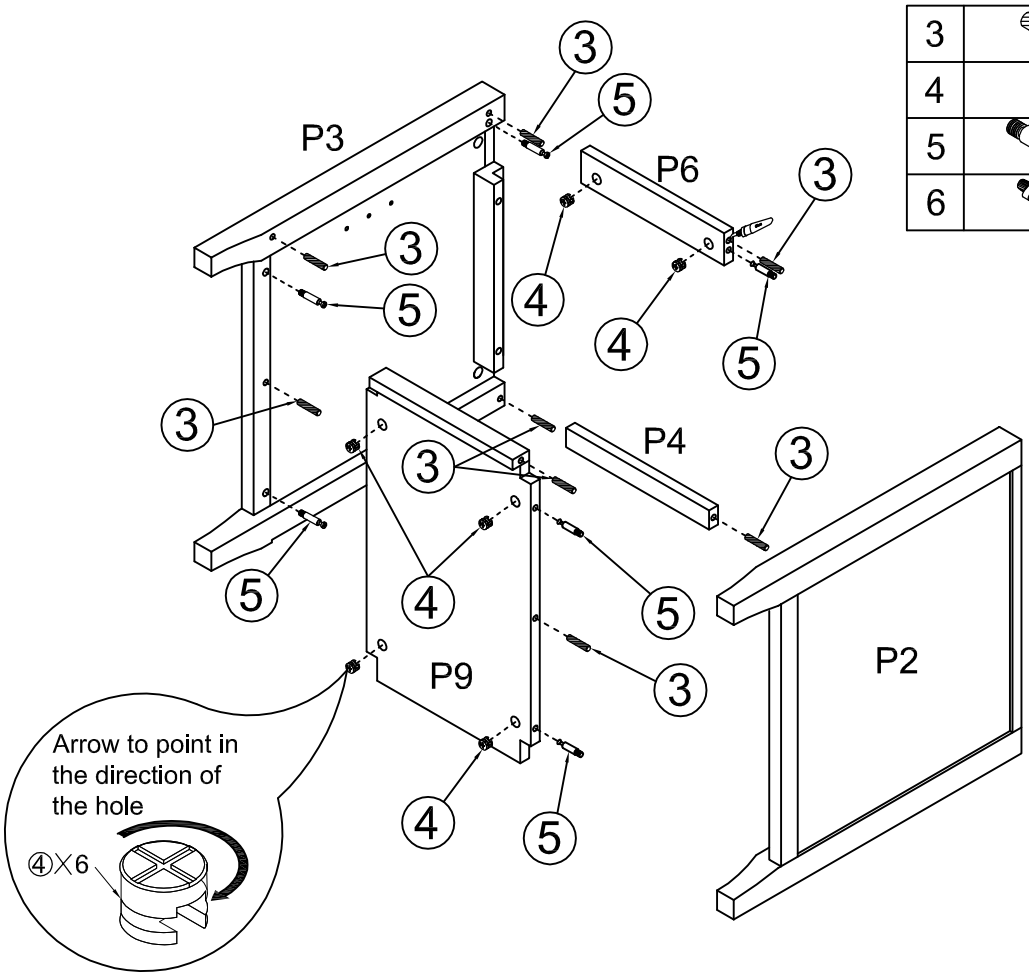

step 5

3		3PCS
4		4PCS
5		4PCS
6		1PC
8		1PC

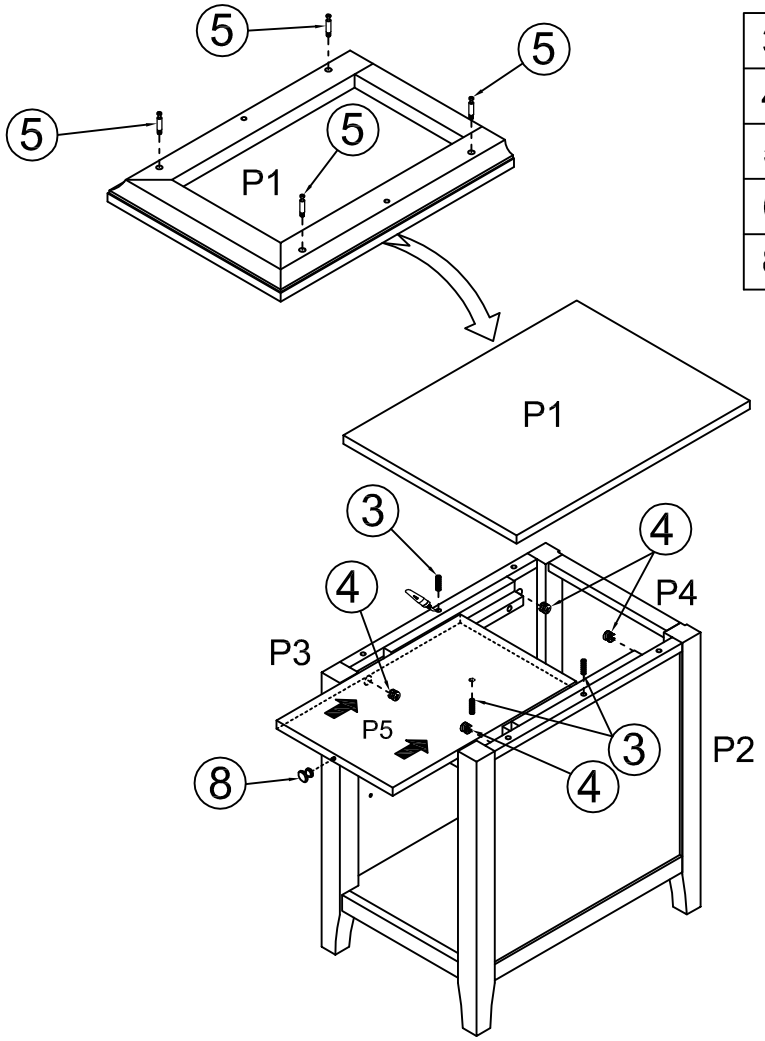

step 6

1		10PCS

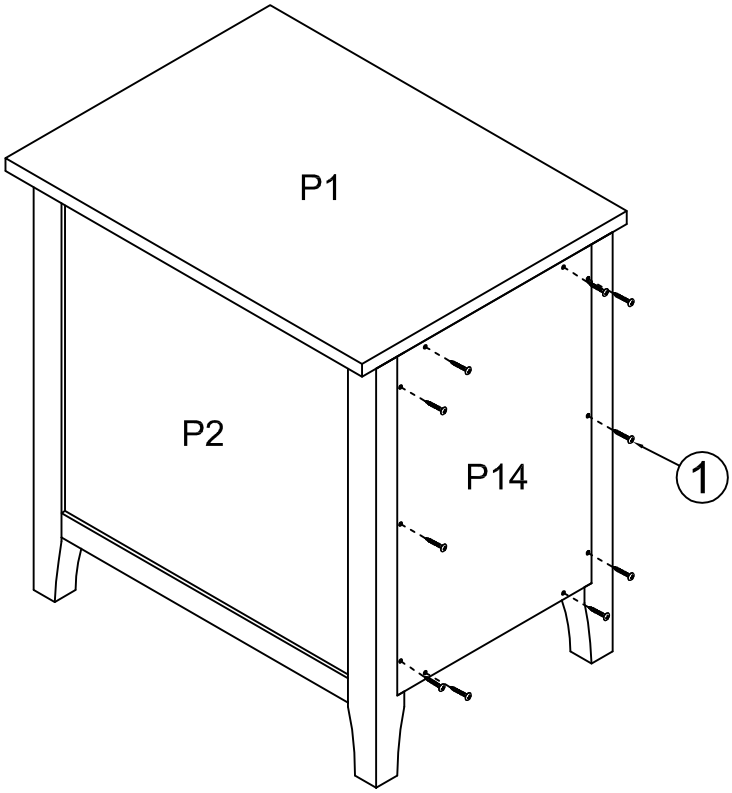

step 7

7		4PCS

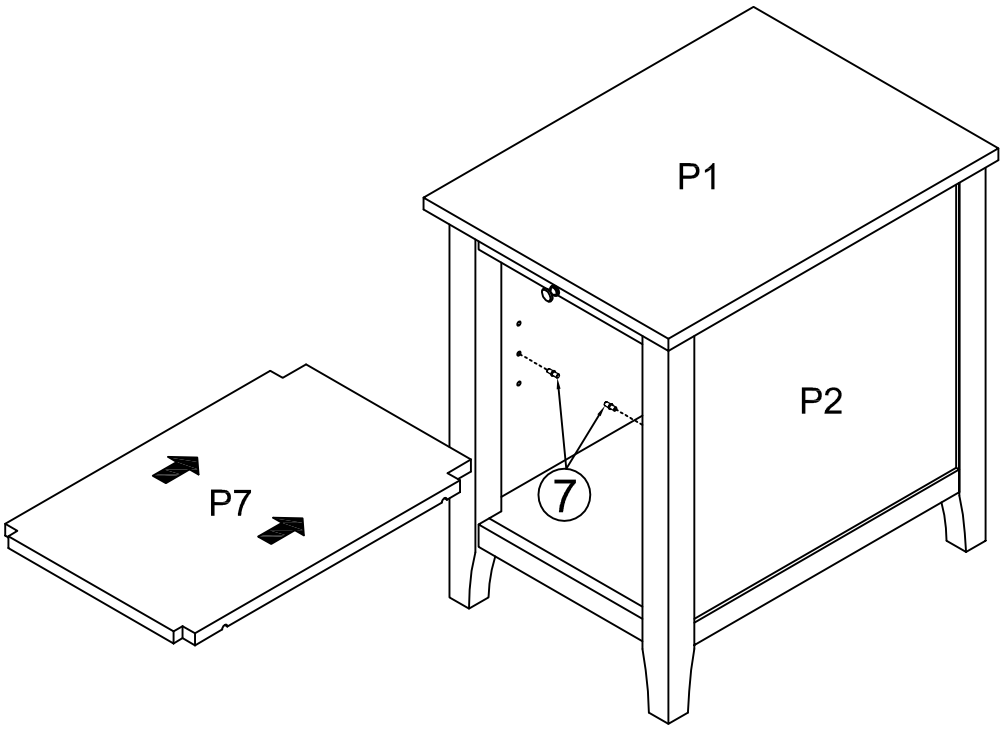

step 8

8		1PC
9		1PC
11		1PC
12		1PC

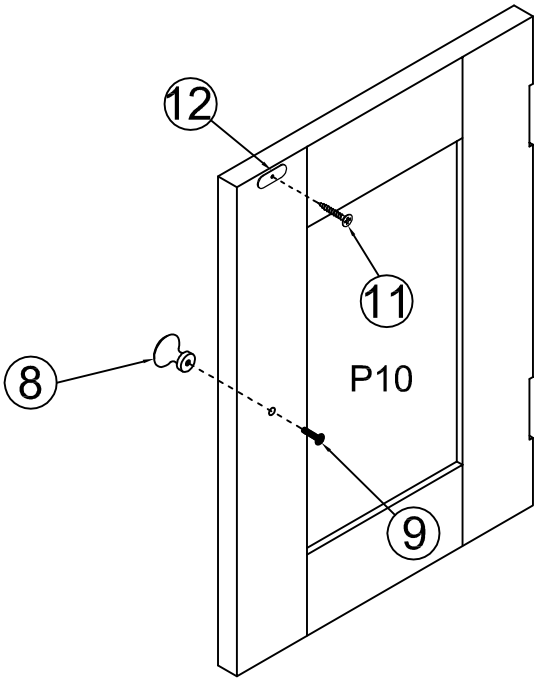

step 9

10		2PCS
11		12PCS
13		1PC

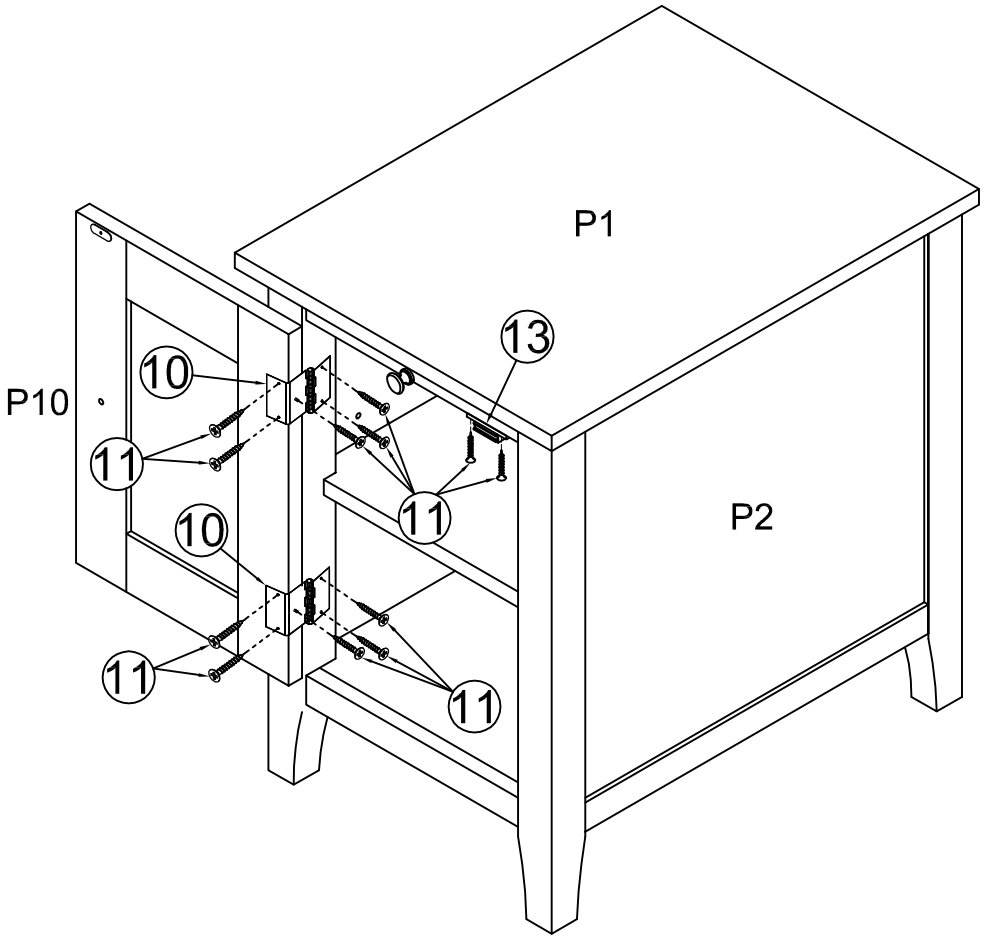
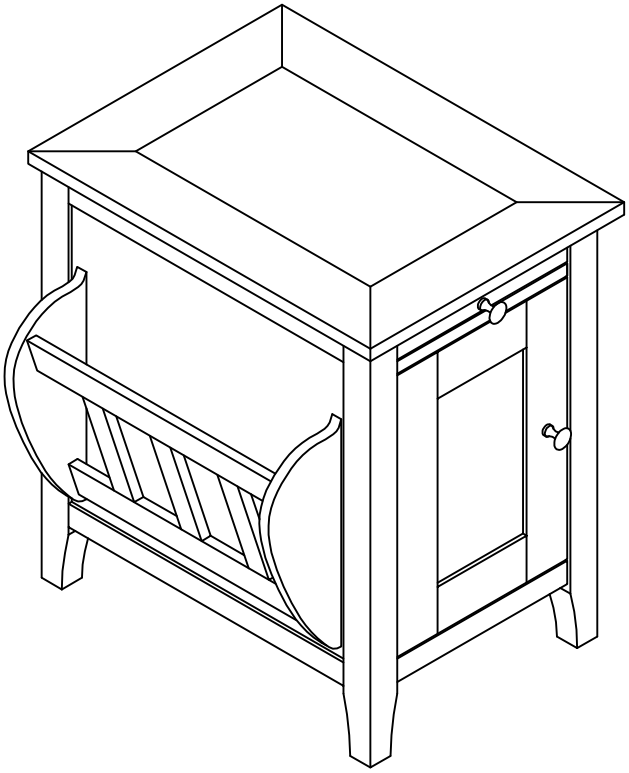
step 10