LUXOR | H.WILSON

www.luxorfurn.com
www.hwilson.com

LCD Mount Instructions

AVJ42-LCD, W42A-LCD

01/31/13

Tools Required

- Phillips Screwdriver
- 8mm Wrench

Parts List

LCD Mount Component List

1 - TV bracket x2
2 - Base block x1
3 - Base plate x1
4 - L bracket x2
5 - Hardware bag x1
6 - Chrome tube x2
7 - Base unit

Hardware Bag

5a - M8x16 set screw x8
5b - M8x20 cap screw x5
5c - M5x35 cap screw x4
5d - M5 metal washer x4
5e - M5 locking nut x4
5f - M5x16TV screw x4
5g - M6x16TV screw x4
5h - M8x35TV screw x4
5i - TV washer x4
5j - TV spacer x4
5k - Allen wrench x3

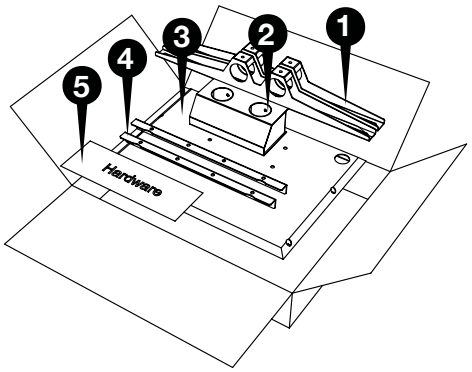

LCD Mount Box

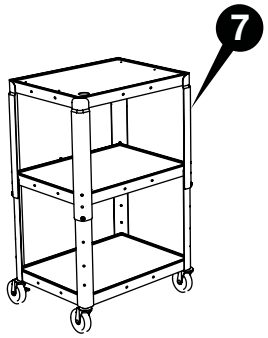

Base Unit

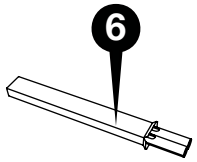

30 in Chrome Tube Box

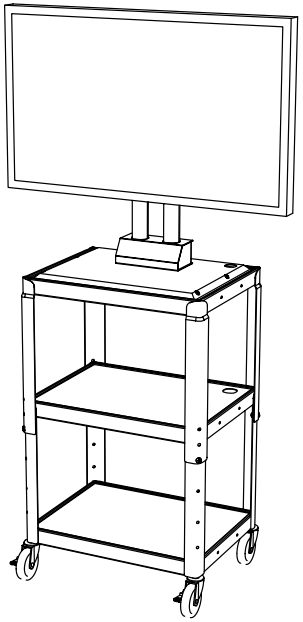

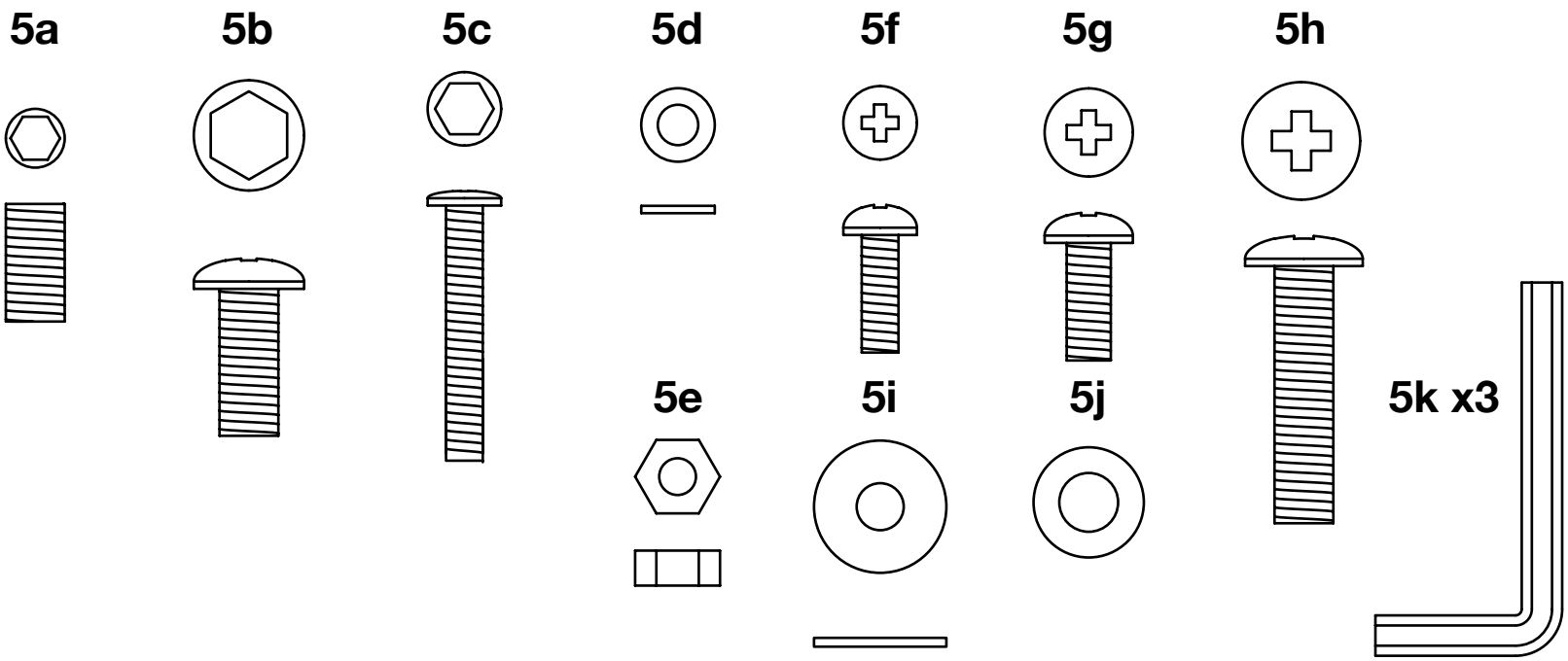

LUXOR | H.WILSON

www.luxorfurn.com
www.hwilson.com

LCD Mount Instructions

AVJ42-LCD, W42A-LCD

1 This assembly requires 2 people. Place your TV on a soft surface. Determine what TV screw works with your TV (**5f**, **5g** or **5h**). Use the metal washer (**5i**) if you are using (**5f**) or (**5g**). If your TV has pockets use the plastic spacer (**5j**) in the pocket with (**5h**). Attach the 2 TV Brackets (**1**) to your TV with the included hardware using a Phillips screw driver (not included).

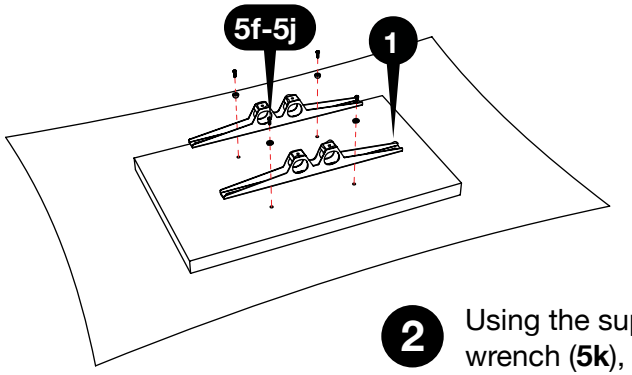

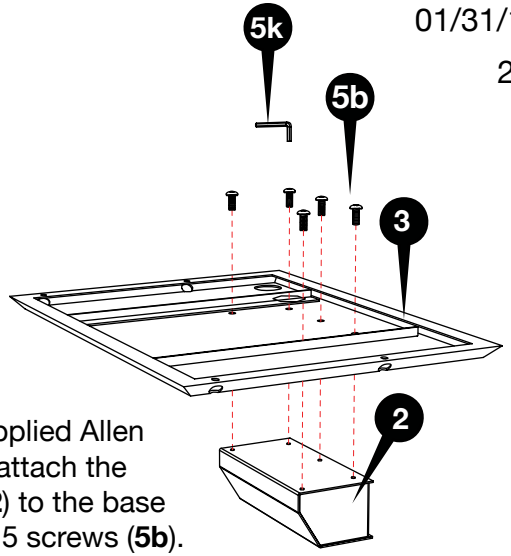

2 Using the supplied Allen wrench (**5k**), attach the base block (**2**) to the base plate (**3**) with 5 screws (**5b**).

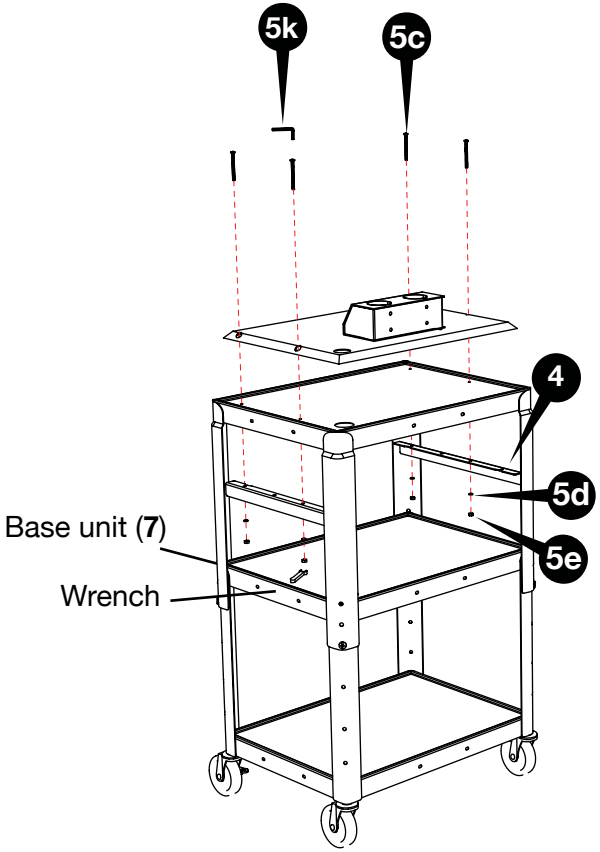

3 Using an Allen wrench (**5k**) and a wrench (not included), attach the assembled unit to the Base unit (**7**) with 2 L brackets (**4**), 4 screws, 4 washers and 4 nuts (**5c**, **5d** & **5e**).

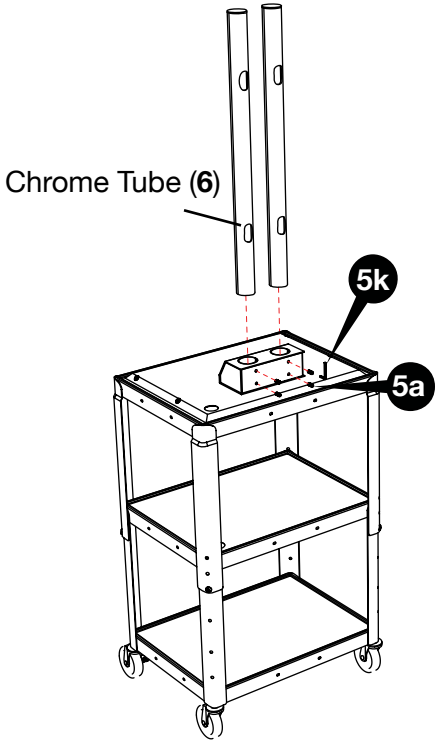

4 Install the 2 chrome tubes (**6**) to the assembled unit. Secure in place with 4 set screws (**5a**).

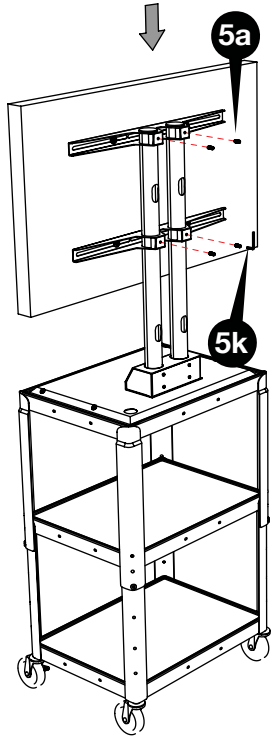

5 With assistance, attach the TV to the assembled unit. Secure in place with 4 set screws (**5a**). You have completed the assembly of your LCD Mount.

01/31/13

LUXOR | H.WILSON

www.luxorfurn.com
www.hwilson.com

Adjustable Height Metal Cart Instructions

AVJ42, W42A

Parts List

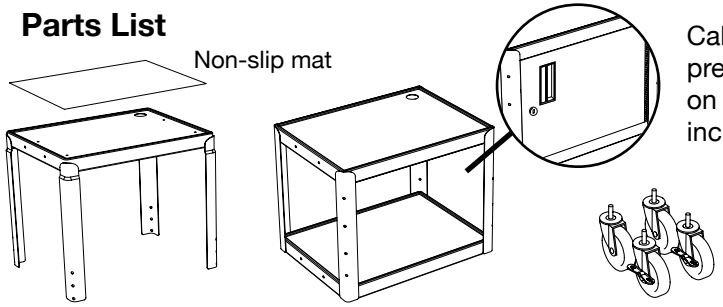

A x1 **B** x1 **C** x4

Cabinet comes pre-assembled on units that include a cabinet.

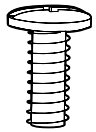

D x4

E x4

Tools Required

- Phillips Screwdriver
- Rubber Mallet
- Pliers or Adjustable Wrench

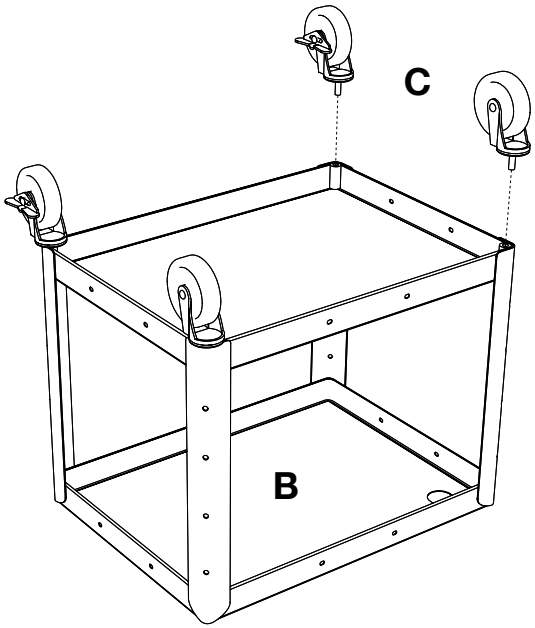

1

Position the bottom shelf **B** so that the caster holes are facing up. Insert caster **C** into the caster holes on the bottom of shelf **B**. Use a mallet to set the casters properly.

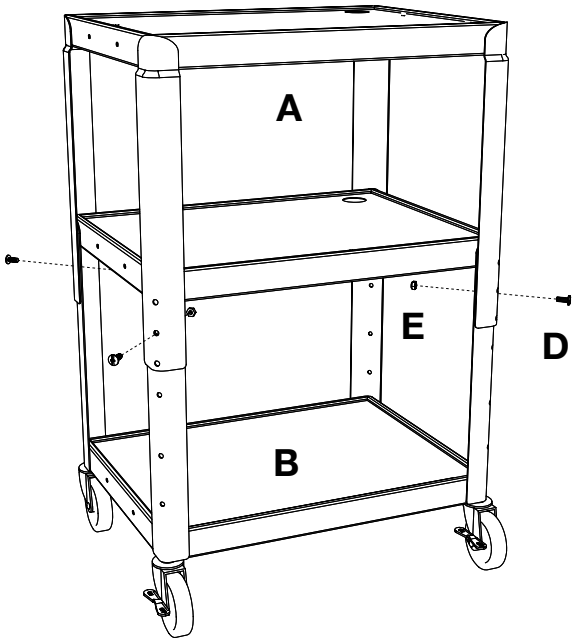

2

Flip bottom shelf **B** so that it is on its side. Set top shelf **A** so that it overlaps bottom shelf **B**. Align the screw holes so that the top shelf **A** is at the desired height.

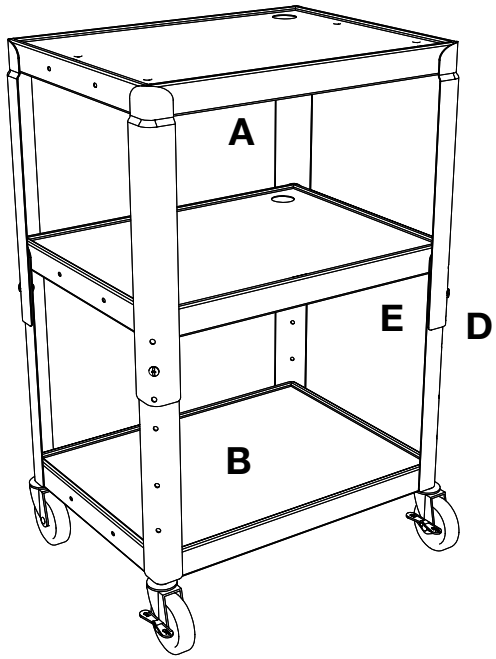

3

Insert screw **D** through the aligned screw hole of **A** and **B** and fasten nut **E** with pliers and screwdriver. Place Non-slip mat on desired shelf. The cart is now complete.

01/31/13

LUXOR | H.WILSON

www.luxorfurn.com
www.hwilson.com

Electric Assembly Instructions

Number of outlets may vary.

Parts List

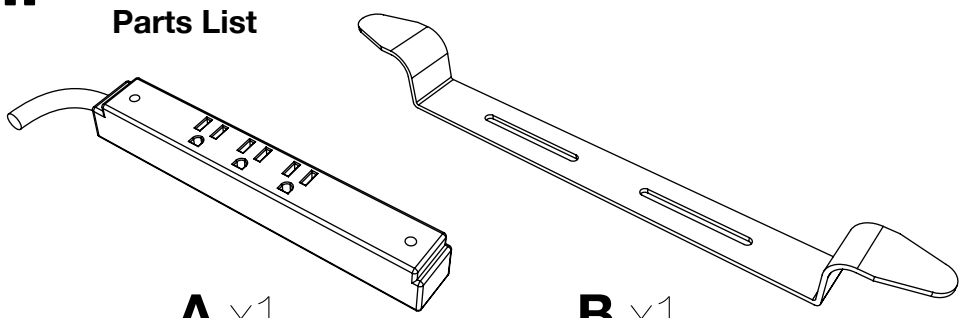

A x1 **B** x1

Tools Required

- Screwdriver

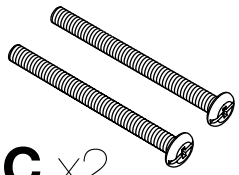

C x2

D x2

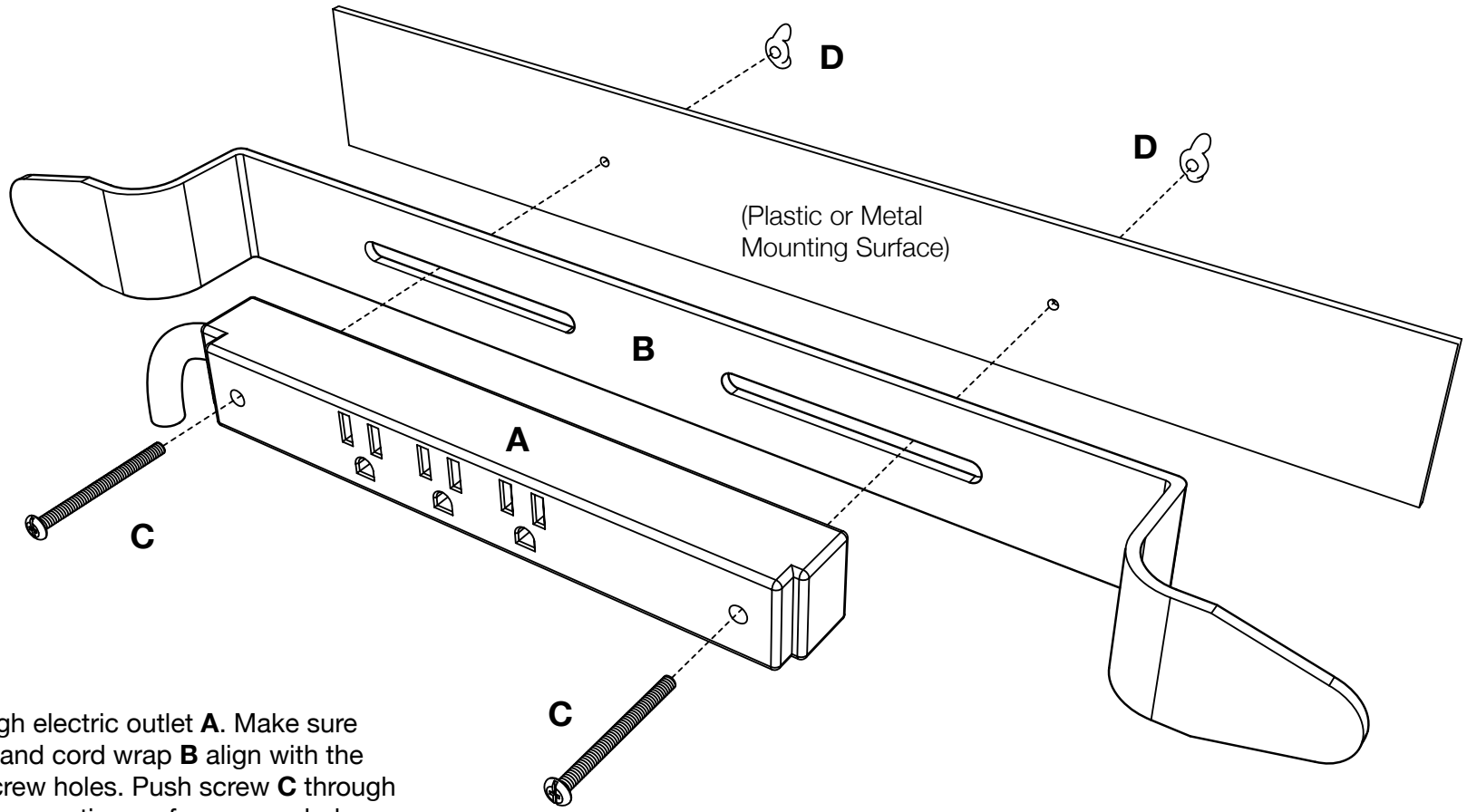

1

Push screw **C** through electric outlet **A**. Make sure the electric outlet **A** and cord wrap **B** align with the mounting surface screw holes. Push screw **C** through cord wrap **B** and the mounting surface screw holes. Use wing nut **D** and screwdriver to fasten.