Zoroufy Classic WALL HANGER

INSTALLATION INSTRUCTIONS

PATENT #5,318,174

SPECIFICATIONS

FINIAL	LENGTH
Pineapple	1 3/8"
Round	3/4"
Crown	1 7/8"
Urn	1 1/4"
Acorn	1 1/4"
ROD DIAMETER:	1/2"

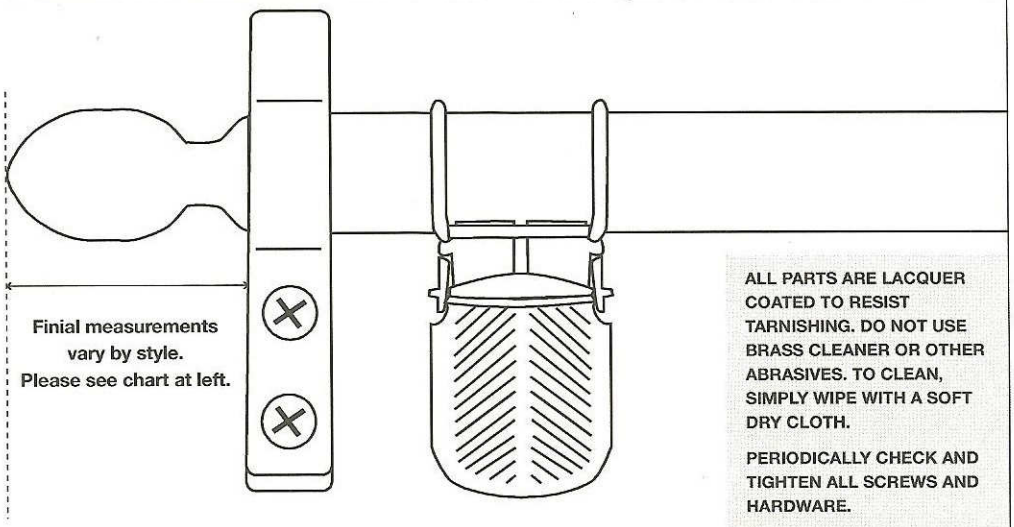

ALL PARTS ARE LACQUER COATED TO RESIST TARNISHING. DO NOT USE BRASS CLEANER OR OTHER ABRASIVES. TO CLEAN, SIMPLY WIPE WITH A SOFT DRY CLOTH.

PERIODICALLY CHECK AND TIGHTEN ALL SCREWS AND HARDWARE.

JUST FOLLOW THESE SIMPLE STEPS.

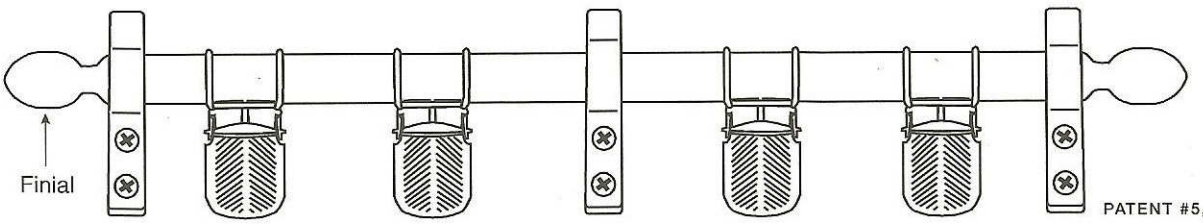

PATENT #5,318,174

Zoroufy Classic Wall Hangers measuring more than 48" in length consist of more than one rod to make the finished length.

FOR SETS 48" AND LESS

1. Hold rod in desired position against wall. Place one end bracket on the end and mark position of holes.
2. Install marked end bracket with screws provided. You must use wall anchors suitable for your wall material if screws are not installed into a stud.
3. Slide center support bracket onto the rod and place remaining end bracket on the end of the rod.
4. Locate position of remaining end bracket on the wall by leveling the rod. Mark the installation holes of the remaining end bracket and install using screws provided. You must use wall anchors suitable for your wall material if screws are not installed into a stud.
5. Position center support bracket in desired position and install using screws provided. You must use wall anchors suitable for your wall material if screws are not installed into a stud.
6. Attach clips to rug or tapestry and hang by placing clips over the rod.

FOR SETS LONGER THAN 48"

1. Hold one rod in desired position against wall. Place one end bracket on the end and mark position of holes.
2. Install marked end bracket with screws provided. You must use wall anchors suitable for your wall material if screws are not installed into a stud.
3. Slide center support bracket onto the rod and place double-wide center support bracket on the end of the rod. Insert end of rod half way through the double-wide center support bracket and secure into position by tightening the small set screw on the face of the bracket.
4. Locate position of remaining end bracket on the wall by leveling the rod. Mark the installation holes of the remaining end bracket and install using screws provided. You must use wall anchors suitable for your wall material if screws are not installed into a stud.
5. Install the remaining rods by following the above steps.
6. Attach clips to rug or tapestry and hang by placing clips over the rods.

© 2006 ZOROUFY

P.O. BOX 620345 • MIDDLETON, WI 53562-0345 • PHONE 800-762-1525 • FAX 608-833-8797 • www.zoroufy.com